# 2/2 WAY THREAD STAINLESS STEEL PNEUMATIC ANGLE SEAT VALVE

## Ordering Code

**KLJZF - □ - □ □ □ - □ - □**

- **KLJZF** — Specification Code **KLJZF:** KAILING Angle seat Valve
- □ — Orifice Size (mm) DN15~100
- □ — Actuator Material **Blank:** Polyamide **SS:** Stainless steel
- □ — Valve Body Material **Blank:** SS304 **SS316:** SS316
- □ — Mounting **F:** Flang type **Q:** Tri-clamp connection **W:** Welding model **Blank:** Thread model
- □ — **Blank:** Single-action normally closed **2:** Double-acting normally closed **3:** Single-action normally closed (Water hammer free, low pressure) **4:** Double-acting normally closed (Water hammer free) **5:** Double-acting normally open **6:** Double acting (lowe starting pressure)
- □ — Accessories **P:** With positioner **L:** Limit switch

## Features of Angle Seat Valve

- With valve open or closed position display.
- Pneumatic external pilot, can increase the service life, maintenance-free.
- There is a self-adjusting seal gland between the overflow port and the slider to improve the sealing performance.
- Y-type structure design enabling large flow (compared with globe valve), compact structure, fast response.

## Specification

| | |
|---|---|
| Medium Temperture | -10℃~+180℃ |
| Ambient Temperture | -10℃~+60℃ |
| Max. Working Pressure | 1.6MPa |
| Working Medium | Netral and aggressive liquid, gases |
| Working Pressure | 0.4~0.8MPa |
| Port Size | DN15-DN100 |
| Body Material | SS304、SS316 |
| Sealing Material | PTFE |

## Notice

Flow direction below the seat (direction A)

1. Valves with flow direction below the seat(direction A) ensure long service life.
2. Valves used fo liquid media are waterhammer-free.

Valves with dirction B

1. provide high sealing integrity when media is steam or air.
2. There is no waterhammer free function when media is liquid.

## Installation & Maintenance

- The applicable safety regulations must be observed
- Make sure the pipe line is clean.
- Insallation according to requirement. check the flow direction before installation.
- Connect the valve to the pipeline, and remove the actuator only if the user requires it.
- Shut off the fluid and control air supply and reduce pressure in the piping system before opening or servicing the angle valve.

# Welding Angle Seat Valve

## Plastic actuator

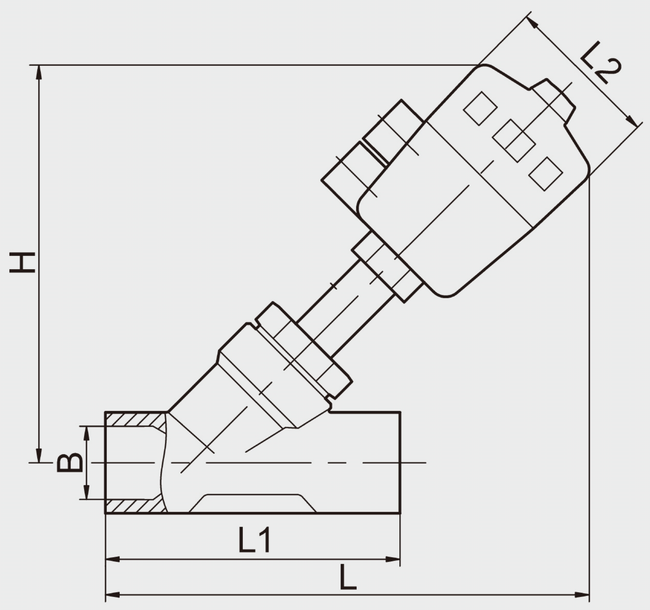


### Dimension Sheet

| Type | Actuator (mm) | L | L1 | L2 | B | H |
|---|---|---|---|---|---|---|
| DN15 | 50 | 190 | 131 | 66.5 | 15.5 | 155 |
| DN20 | 50 | 193 | 131 | 66.5 | 20.5 | 163 |
| DN25 | 63 | 226 | 140 | 82.5 | 26.5 | 195 |
| DN32 | 63 | 230 | 150 | 82.5 | 32 | 199 |
| DN40 | 63 | 248 | 179 | 82.5 | 40 | 209 |
| DN50 | 80 | 280 | 195 | 102.5 | 50 | 234 |

## SS actuator

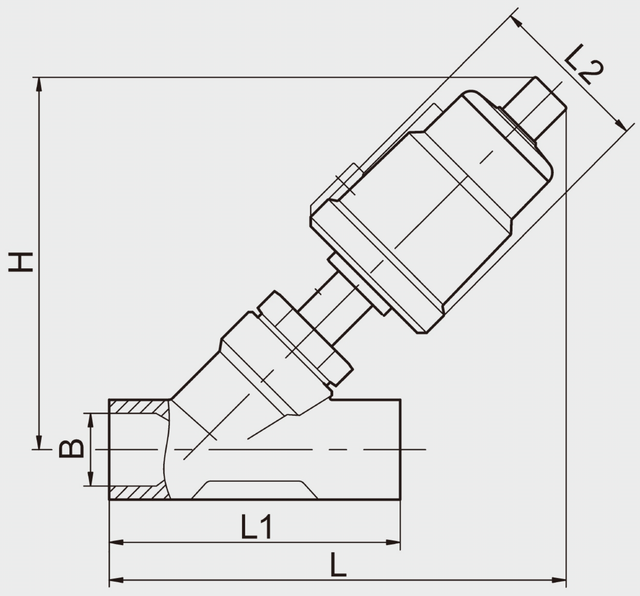


| Type | Actuator (mm) | L | L1 | L2 | B | H |
|---|---|---|---|---|---|---|
| DN15 | 50 | 193 | 131.5 | 61.5 | 15.5 | 160 |
| DN20 | 50 | 192 | 130 | 61.5 | 20.5 | 163 |
| DN25 | 63 | 217 | 141 | 75.5 | 26.5 | 186 |
| DN32 | 63 | 222 | 150.5 | 75.5 | 32.5 | 194 |
| DN40 | 63 | 238 | 180 | 75.5 | 40.5 | 203 |
| DN50 | 80 | 255 | 195 | 75.5 | 50 | 213 |