KL6014 SERIES 3/2 WAY DIRECT ACTING SOLENOID VALVE

6014 015-08

6014 015-B

Ordering Code

KL6014 - 01 - B - V - AC220V

KL6014	01	B	V	AC220V
Specification Code **KL6014:** 3/2 Way Acting Solenoid Valve	Orifice size **01:** 1mm **015:** 1.5mm **02:** 2mm **025:** 2.5mm	Port size **B:** Sub-base Connection **06:** ZG1/8" **08:** ZG1/4"	Sealing Material **Blank:** NBR **E:** EPDM **V:** VITON **SI:** SI	Standard Voltage **DC12V** **DC24V** **AC24V** 50Hz/60Hz **AC110V** 50Hz/60Hz **AC220V** 50Hz/60Hz **AC380V** 50Hz/60Hz

Specification

Model	Orifice Size (mm)	Port Size	Pressure Difference (MPa)	Operating Temp. (℃)	Meduim Temp. (℃)	CV Value	Body Material
6014-01-B	1	Sub-base Connection	0 ~ 1.6	-20 ~ 55	NBR:-5 ~ 80 EPDM:-5 ~ 120 VITON:-10 ~ 150 SI: -15~150	0.08	Brass
6014-015-B	1.5		0 ~ 1			0.13	
6014-02-B	2		0 ~ 0.8			0.13	
6014-025-B	2.5		0 ~ 0.6			0.18	
6014-01-06	1	ZG1/8"	0 ~ 1.6			0.08	
6014-015-06	1.5		0 ~ 1			0.13	
6014-02-06	2		0 ~ 0.8			0.13	
6014-025-06	2.5		0 ~ 0.6			0.18	
6014-01-08	1	ZG1/4"	0 ~ 1.6			0.08	
6014-015-08	1.5		0 ~ 1			0.13	
6014-02-08	2		0 ~ 0.8			0.13	
6014-025-08	2.5		0 ~ 0.6			0.18	
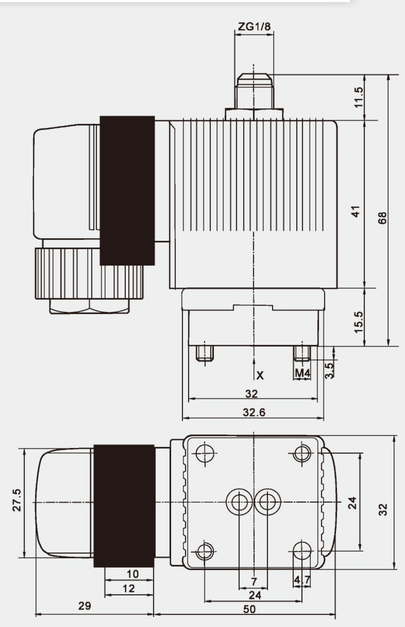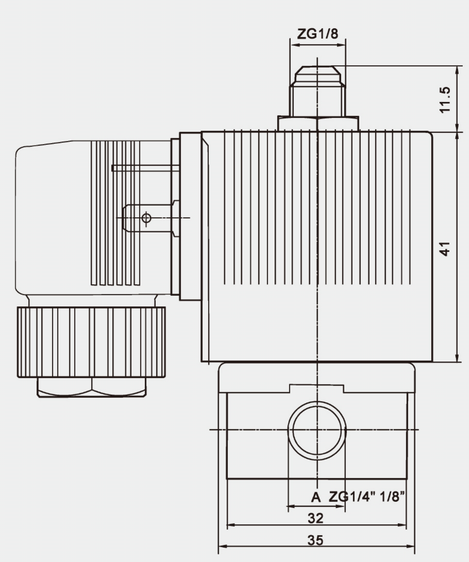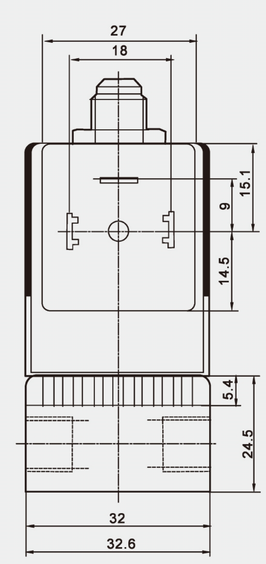
Overall Dimension