KL0311 SERIES 4/2 WAY SOLENOID VALVE

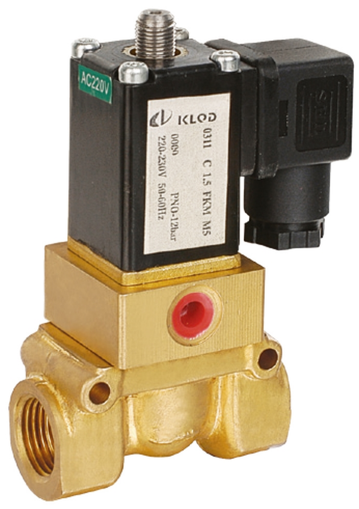

Ordering Code

KL0311 - 08 - M5 - AC220V

- **KL0311** — Specification Code
- **08** — Port size
  - **08:** ZG1/4"
  - **10:** ZG3/8"
  - **15:** ZG1/2"
- **M5** — Middle Port size
  - **Blank:** ZG1/8"
  - **M5:** M5
- **AC220V** — Standard Voltage
  - **DC12V**
  - **AC24V** 50Hz/60Hz
  - **AC110V** 50Hz/60Hz
  - **DC24V**
  - **AC220V** 50Hz/60Hz
  - **AC380V** 50Hz/60Hz

Feature

Mainly used in air compressor to control loading,off-loading,pressurizing,decompression,inlet,exhaust automatically.
It has the character of high pressure-proof,flexible acting,low demand of media purity because of piston construction and viton seal.
It is 4/2 way solenoid valve (one inlet port, 2 working ports, one exhaust port). It is same with function of one 2/2 way (NC type) and one 3/2 way solenoid valve. It can reduced the cost of material and manufacturing,also can make the pipe line simple. this valve is with simple construction,small size,good sealing,easy fixing.

Specification

Model	KL0311
Orifice Size (mm)	Top: 2mm
	Body: 13mm
CV Value	3.6
Port Size	Top: ZG1/8"
	Middle: ZG1/8"、M5
	Body: ZG1/4"、ZG3/8"、ZG1/2"
Pressure Difference	0.05~1.2MPa
Temperature	-5~85℃
Voltage Tolerance	±10%
Body Material	Brass
Sealing Material	VITON or NBR
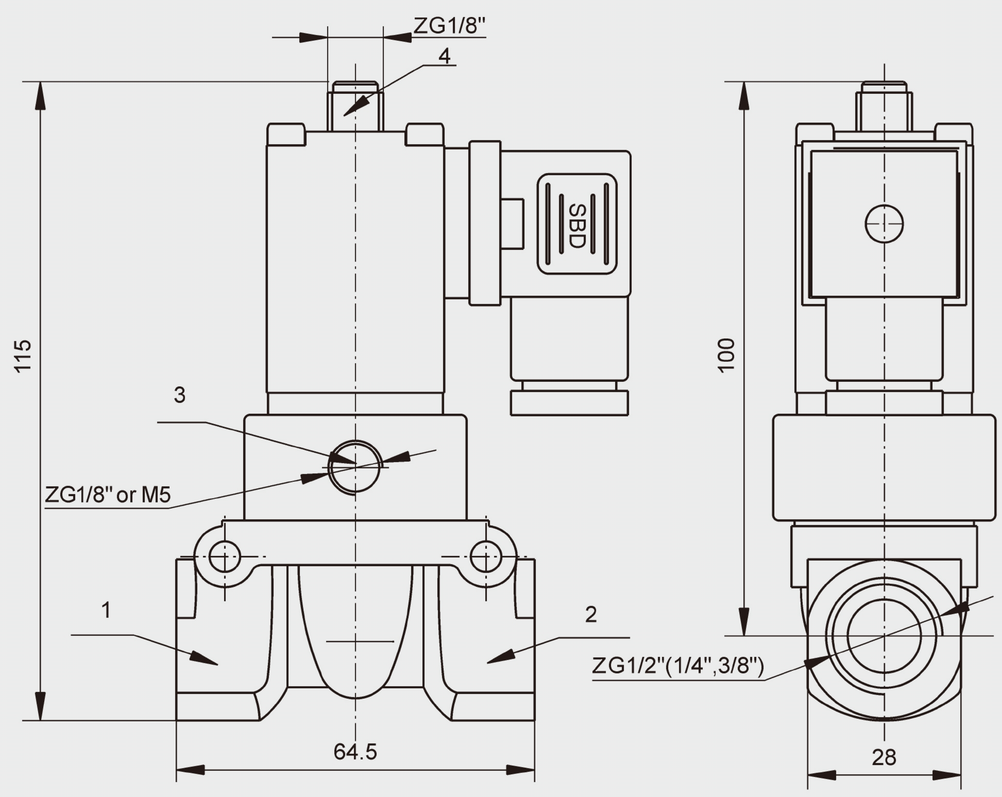
Overall Dimension