PU225 SERIES SOLENOID VALVE

PU225T-04
With timer

PU225-04NO

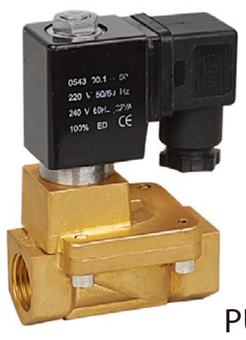
PU225-04

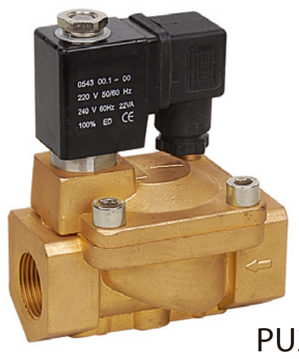
PU225-06

Ordering Code

PU225 - 06 - Z - NBR - AC110V

- **PU225**: 2/2 Way Pilot Solenoid Valve
- **06**: Port Size
  - **03:** ZG3/8″ **08:** ZG1″
  - **04:** ZG1/2″ **12:** ZG1 1/4″
  - **06:** ZG3/4″ **14:** ZG1 1/2″
- **Z**: Coil
  - **Z:** EX-proof
  - **Blank:** IP65 Coil
  - **T:** Timer
- **NBR**: Sealing Material
  - **Blank:** NBR
  - **E:** EPDM
  - **V:** VITON
  - **SI:** SI
- **AC110V**: Standard Voltage
  - **DC12V** **DC24V**
  - **AC24V** 50Hz/60Hz **AC220V** 50Hz/60Hz
  - **AC110V** 50Hz/60Hz **AC380V** 50Hz/60Hz

Specification

Model	PU225-03	PU225-04	PU225-06	PU225-08	PU225-12	PU225-14
Port Size	ZG3/8″	ZG1/2″	ZG3/4″	ZG1″	ZG1 1/4″	ZG1 1/2″
Fluid	Compressed Air, Water, Light oil (Below 50CST)					
Operation	Pilot Operated					
Material	Brass					
Orifice Size (mm)	13		25		38	
Sectional Area (mm)	88		230		404	552
CV Value	4.50		12.00		22.00	30.00
Pressure Difference (kg/cm^2)	0.5~10					
Medium Temperature	NBR: -5 ~ 80℃; EPDM: -5 ~ 120℃; VITON: -10 ~ 150℃; SI: -15~150℃					
Ambient Temperature	-20℃~60℃					
Power Consumption	22VA					
Duty Cycle	100%					
Installation	Horizontal or Slant					
Coils Type	DIN					
Voltage Tolerance	± 10%					
Protection Degree	IP65					
Insulation	F					
Standard Voltage	Standard: DC24, AC220V, AC110V, 50/60HZ Especial: DC12V, DC48V, AC24V, AC380V					

Overall Dimension

PU225
Normally closed

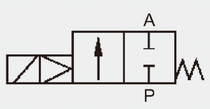

PU225
Normally open

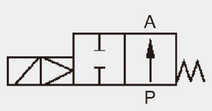

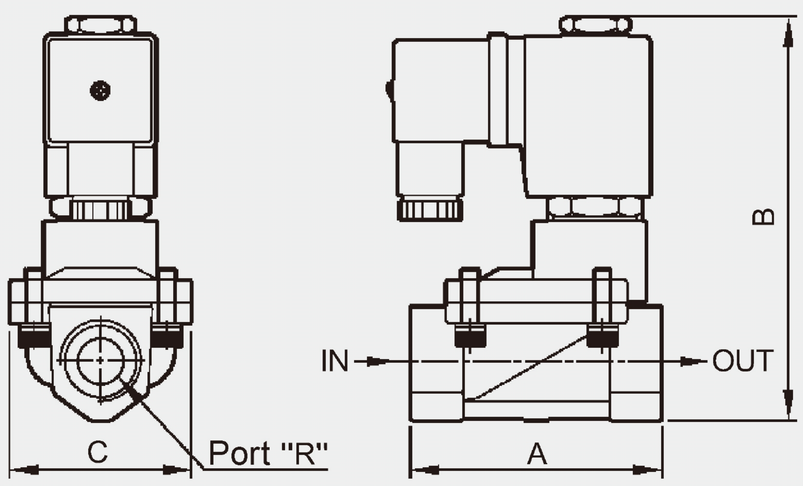

Dimension Sheet

Model	PU225-03	PU225-04	PU225-06	PU225-08	PU225-12	PU225-14
R	ZG3/8"	ZG1/2"	ZG3/4"	ZG1"	ZG1 1/4"	ZG1 1/2"
A	66	66	98	98	131	131
B	106.5	106.5	126	126	145.5	145.5
C	48	48	70	70	96	96