# KL55015 SERIES 2/2 WAY HIGH PRESSURE SOLENOID VALVE

KL55015

## Feature

- Operating pressure up to 5 MPa, media range from –5℃~80℃, port size is 1/2".
- Pilot operated, fast response.
- Suitable for media of water, gas, acetylene, liquefied gas etc, with kinematic viscosity ≤ 1mm$^2$/s.
- Coil are encapsulated with thermoset plastics.

## Product Introduction

Suitable for media of gas, water, acetylene. Usually applied to the bottle machines.
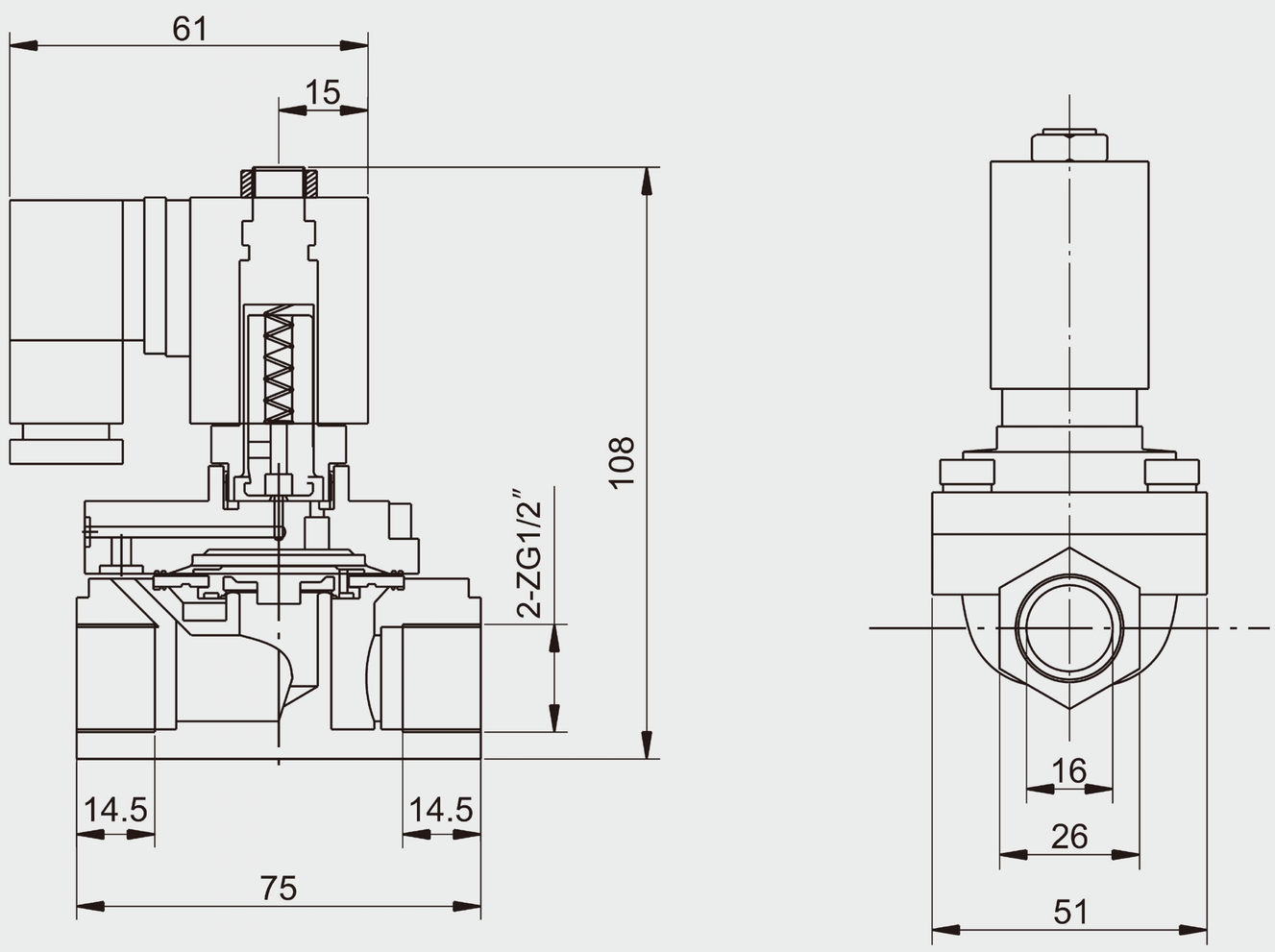
## Overall Dimension