HAND-PULL VALVE

TSV86522M

TSV98322M

Ordering Code

TSV86 52 2 - M

- Specification Code: Hand-pull Valve
- Position and Way NO.: 5/2 Way
- Port Size: **1:** G1/8" **2:** G1/4"
- Type Code: **M:** Machinery Locking Type **S:** Spring Reset Type

TSV98 32 2 - M

- Specification Code: Hand-pull Valve
- Position and Way NO.: 3/2 Way
- Port Size: **1:** G1/8" **2:** G1/4"
- Type Code: **M:** Machinery Locking Type **S:** Spring Reset Type

Specification

Model	TSV86522 M/S	TSV98322 M/S
Working Medium	40 Micron Filtered Air	
Motion Pattern	Direct Drive Type	
Effective Section Area	18mm²(CV=1.00)	
Port Size	G1/4"	
Workin Pressure Range	0~0.8MPa	
Operating Temperature Range	0~60℃	

Overall Dimension

TSV86522

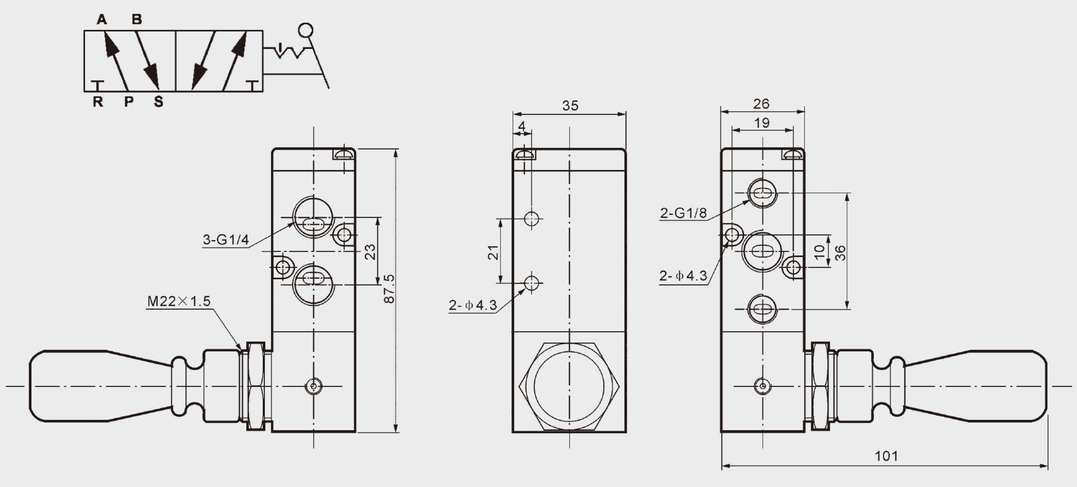
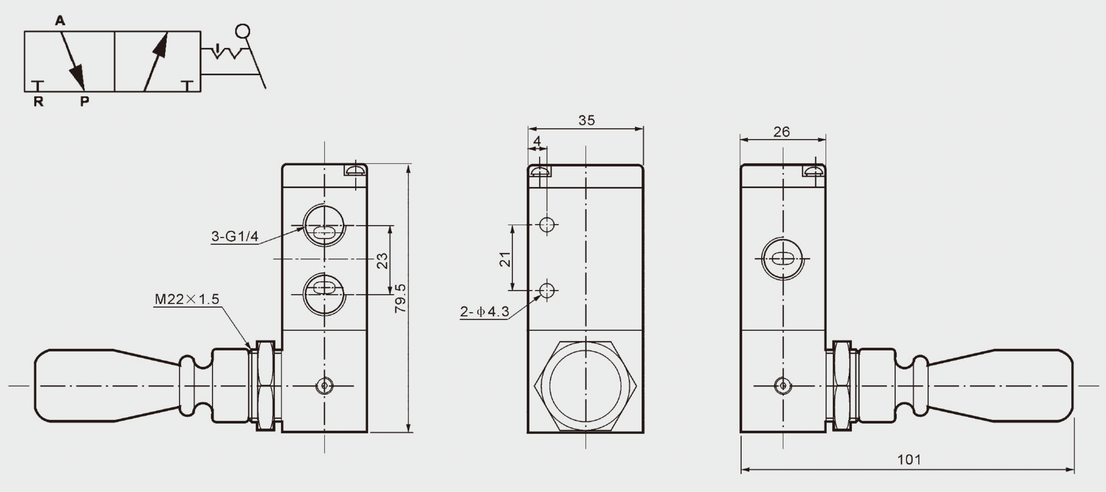
TSV98322