SHUTTLE VALVE

ST-01

ST-04

Ordering Code

ST - 01

Specification Code
ST: Shuttle Valve

Port Size
01: G1/8“ **04:** G1/2“
02: G1/4“ **06:** G3/4“
03: G3/8“ **08:** G1“

Graphic Symbol

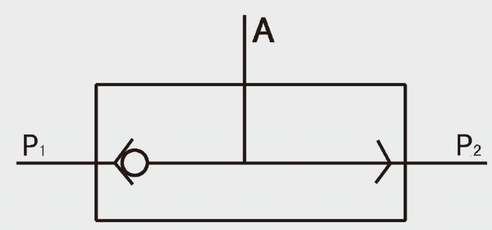

Specification

Model	ST-01	ST-02	ST-03	ST-04	ST-06	ST-08
Working Medium	Air					
Effective Section Area	7.5mm²	21mm²	40mm²	60mm²	110mm²	190mm²
Port Size	G1/8“	G1/4“	G3/8“	G1/2“	G3/4“	G1“
Working Pressure Range	0~1.0MPa					
Operating Temperature Range	0~60℃					

Overall Dimension

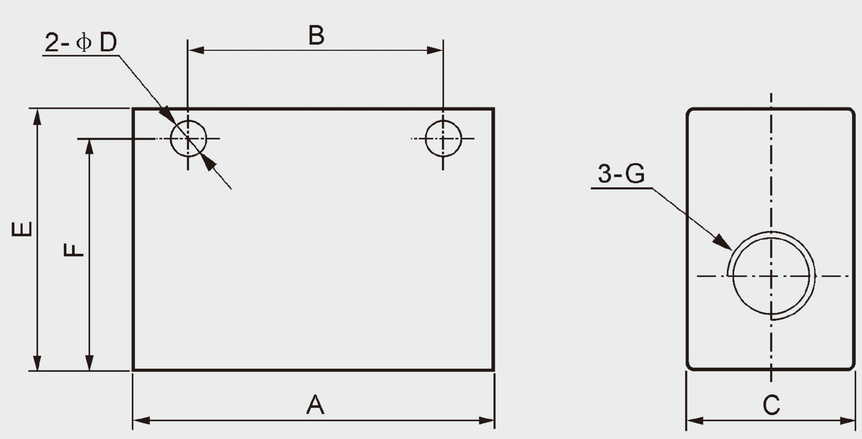

Dimension Sheet

Model	A	B	C	D	E	F	G
ST-01	40	24	16	4.5	25	20.5	G1/8“
ST-02	50	35	22	5.5	35	25	G1/4“
ST-03	75	48	30	7	50	42	G3/8“
ST-04	75	48	30	7	50	42	G1/2“
ST-06	110	72	40	7	70	58	G3/4“
ST-08	110	72	40	7	70	58	G1“