AFR, BFR SERIES FILTER & REGULATOR

AFR2000 BFR4000

Ordering Code

BFR	3000	-	D
Model **AFR:** Small Size **BFR:** Middle Size	Port Size **1500:** G1/8" **2000:** G1/4" **3000:** G3/8" **4000:** G1/2"		Drain Type **Blank:** Differential Drain **D:** Automatic Drain

Graphic Symbol

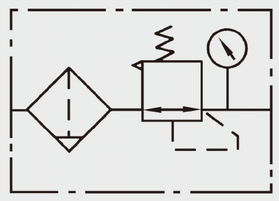

Specification

Model		AFR1500	AFR2000	BFR2000	BFR3000	BFR4000
Operating Fluid		Air				
Port Size		G1/8"	G1/4"	G1/4"	G3/8"	G1/2"
Range of Adjustable Pressure		0.05~0.85MPa				
Max. Adjustable Pressure		0.95MPa				
Ensured Pressure Resistance		1.5MPa				
Operating Temperature Range		5~60℃				
Capacity of Filter Cup		15cc		60cc		
Weight		0.26KG		0.40KG		
Material	Body	Aluminum Die-casting Forming				
	Container Cup	PE				
	Protective Cup Cover	-		Iron		

Overall Dimension

AFR

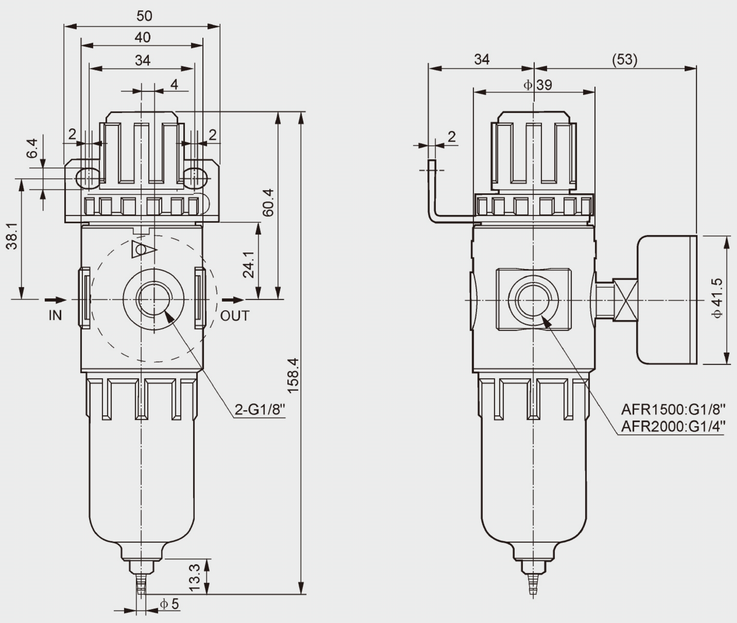
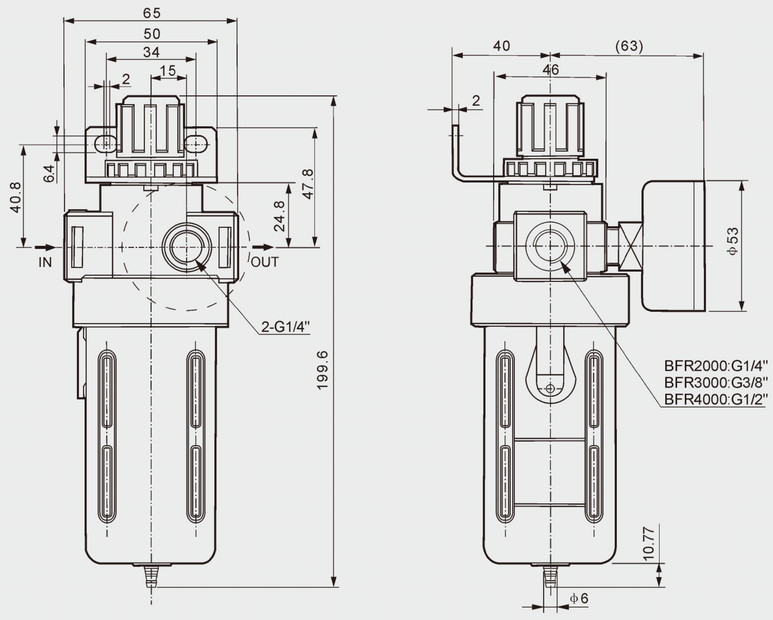
BFR