AR, BR SERIES REGULATOR

AR2000

BR2000

BR4000

Ordering Code

BR | **2000**

Model
AR: Small Size
BR: Middle Size

Port Size
1500: G1/8"
2000: G1/4"
3000: G3/8"
4000: G1/2"

Graphic Symbol

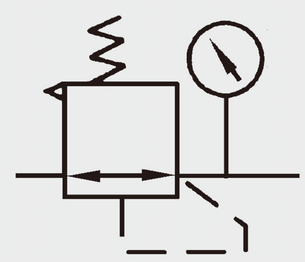

Specification

Model	AR1500	AR2000	BR2000	BR3000	BR4000
Operating Fluid	Air				
Port Size	G1/8"	G1/4"	G1/4"	G3/8"	G1/2"
Range of Adjustable Pressure	0.05~0.85MPa				
Max. Adjustable Pressure	0.95MPa				
Ensured Pressure Resistance	1.5MPa				
Operating Temperature Range	5~60℃				
Weight	0.20 KG		0.23 KG		
Material of Body	Aluminum Die-casting Forming				

Overall Dimension

AR

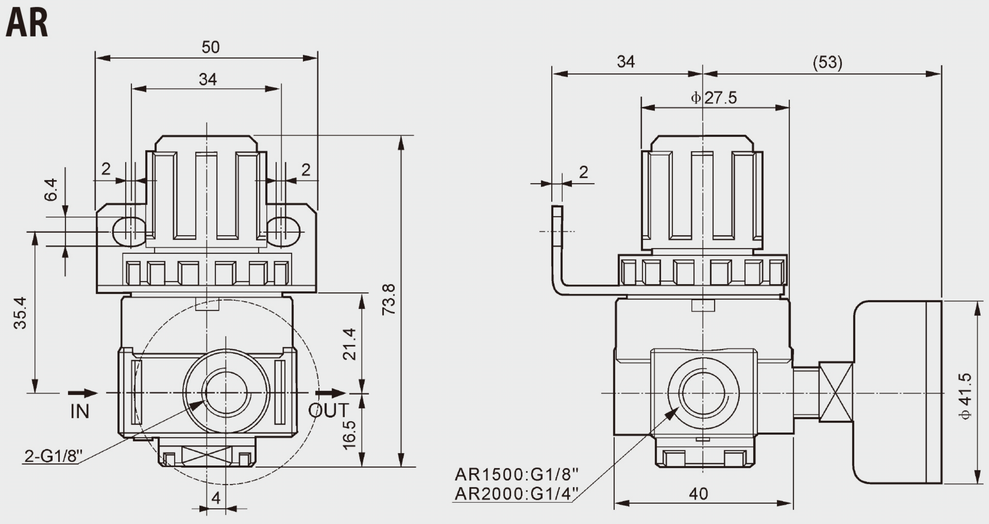
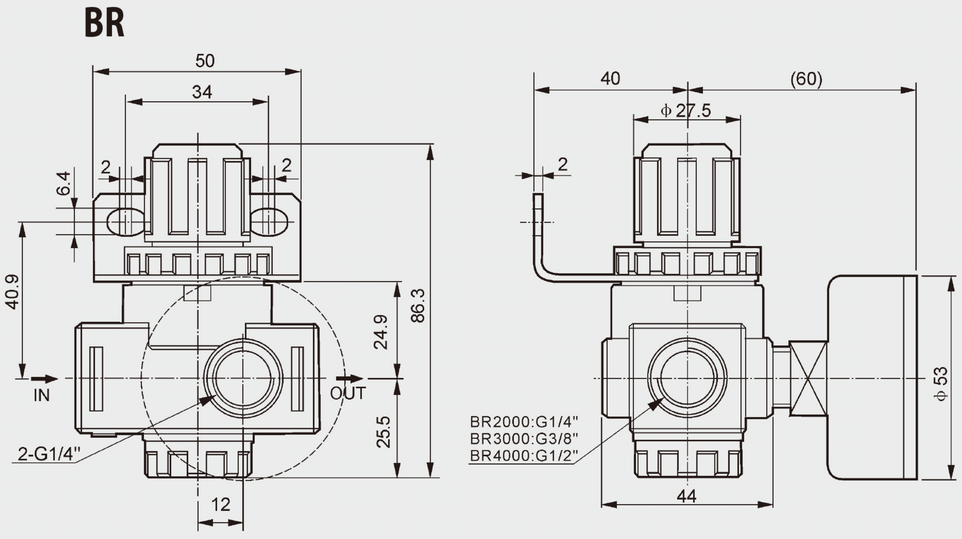
BR