AL1000~5000 SERIES LUBRICATOR

AL2000 AL3000 AL4000 AL5000

Ordering Code

A	L	4000	-	04
Series **A** Series	Function Code Lubricator	Specification Code **1000** **2000** **3000** **4000** **5000**		Port Size **M5:** M5×0.8 **01:** G1/8″ **02:** G1/4″ **03:** G3/8″ **04:** G1/2″ **06:** G3/4″ **10:** G1″

Graphic Symbol

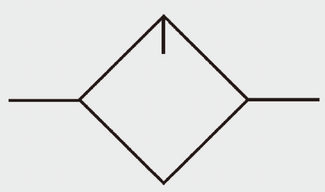

Specification

Model	AL1000 -M5	AL2000 -01	AL2000 -02	AL3000 -02	AL3000 -03	AL4000 -03	AL4000 -04	AL4000 -06	AL5000 -06	AL5000 -10
Rated Flow	95	800	800	1700	1700	5000	5000	5000	7000	7000
Port Size	M5	G1/8″	G1/4″	G1/4″	G3/8″	G3/8″	G1/2″	G3/4″	G3/4″	G1″
Highest Working Pressure	1.0MPa									
Ensured Pressure Resistance	1.5MPa									
Operating Temperature Range	5~60℃									
Suggested Lube	ISO VG 32									
Container Material	Polycarbonate									
Protective Cover	Not Available			Available						

AW1000~5000 SERIES FILTER & REGULATOR

Overall Dimension

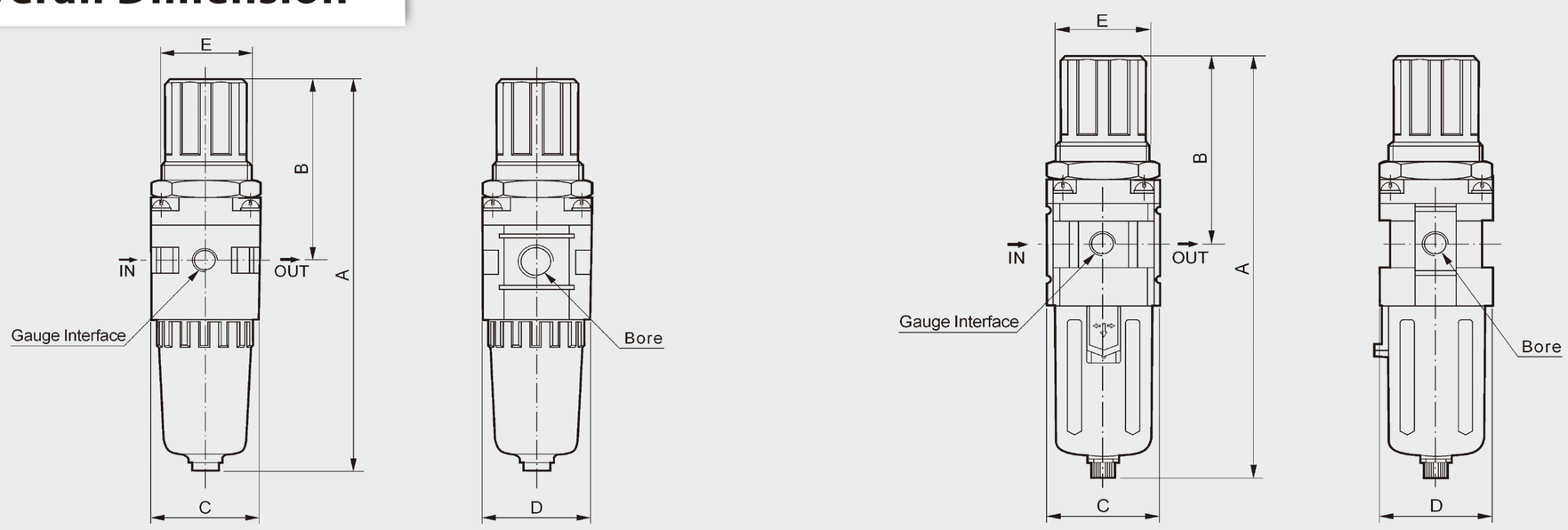

Dimension Sheet

Model	Port Size	A	B	C	D	E
AW1000	M5	109.5	50.5	25	28	28
AW2000	G1/8"~ G1/4"	164.5	78	40	40	34
AW3000	G1/4"~ G3/8"	211	92.5	53	53	40
AW4000	G3/8"~ G1/2"	262	112	70	70	54
AW4000-06	G3/4"	267	114	70	70	54
AW5000	G3/4"~ G1"	338	116	90	90	54

AL1000~5000 SERIES LUBRICATOR

Overall Dimension

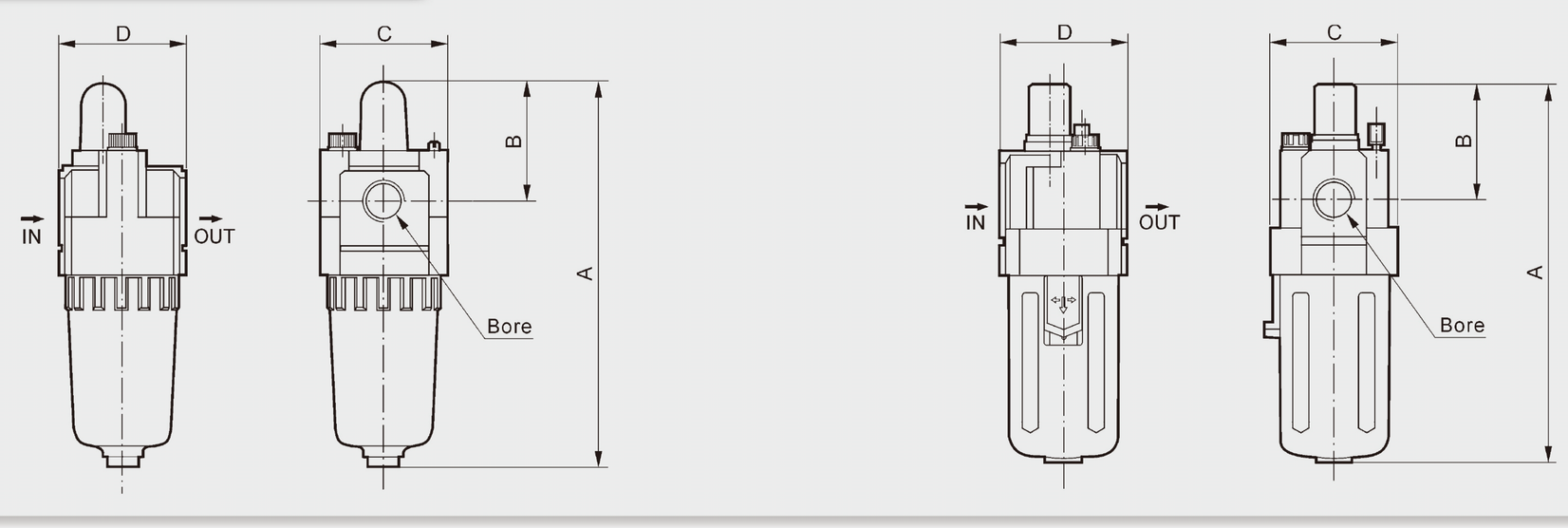

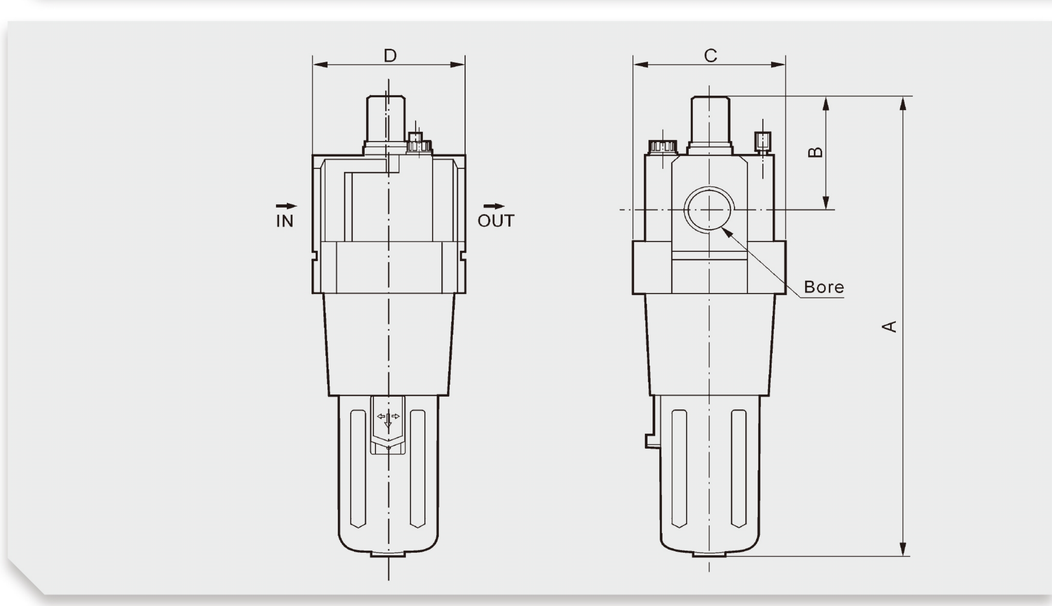

Dimension Sheet

Model	Port Size	A	B	C	D
AL1000	M5	81.5	25.5	25	-
AL2000	G1/8"~ G1/4"	122	38	40	40
AL3000	G1/4"~ G3/8"	142	38	53	53
AL4000	G3/8"~ G1/2"	177	41	70	70
AL4000-06	G3/4"	177	39	70	70
AL5000	G3/4"~ G1"	254	45	90	90