AL, BL SERIES LUBRICATOR

AL2000

BL4000

Ordering Code

BL | **3000** |

Model
AL: Small Size
BL: Middle Size

Port Size
1500: G1/8"
2000: G1/4"
3000: G3/8"
4000: G1/2"

Graphic Symbol

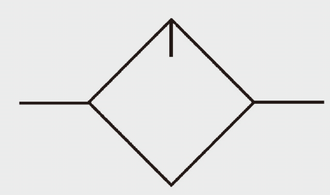

Specification

Model		AL1500	AL2000	BL2000	BL3000	BL4000
Operating Fluid		Air				
Port Size		G1/8"	G1/4"	G1/4"	G3/8"	G1/2"
Ensured Pressure Resistance		1.5MPa				
Operating Temperature Range		5~60℃				
Suggested Lube		ISO VG 32 or Same Grade Oil				
Capacity of Oil Feed Cup		25cc		90cc		
Weight		0.17KG		0.25KG		
Material	Body	Aluminum Die-casting Forming				
	Container Cup	PE				
	Protective Cup Cover	-		Iron		
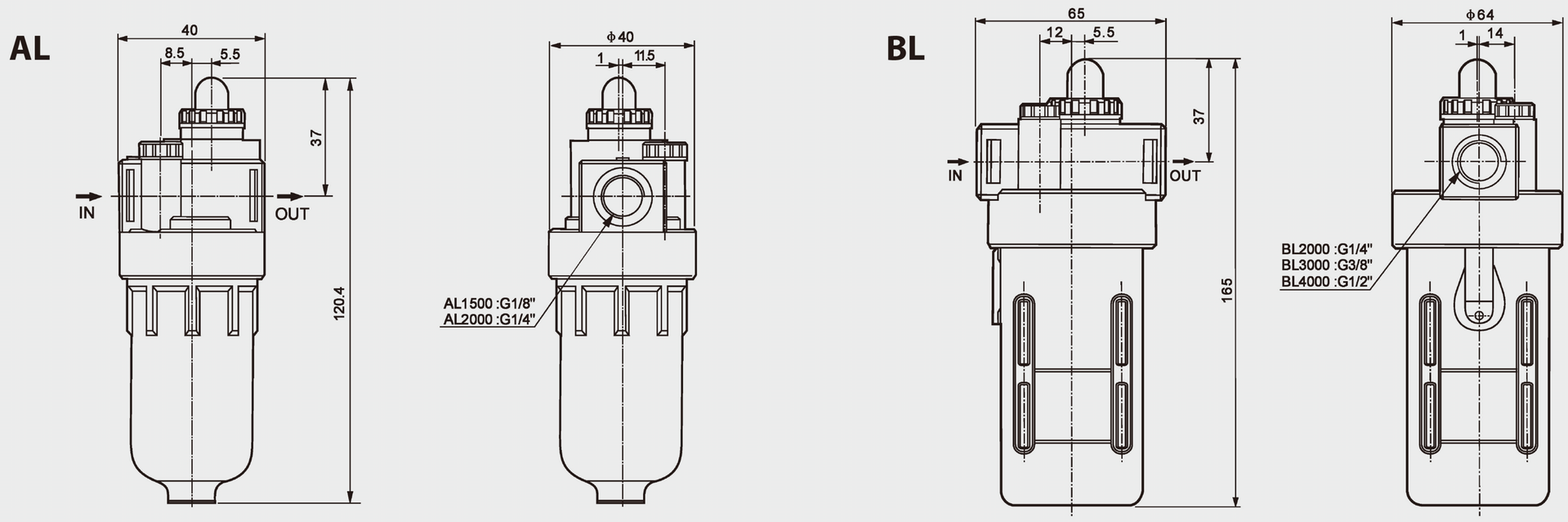
Overall Dimension