MUFFLERS

BSL

BSL Type Muffler

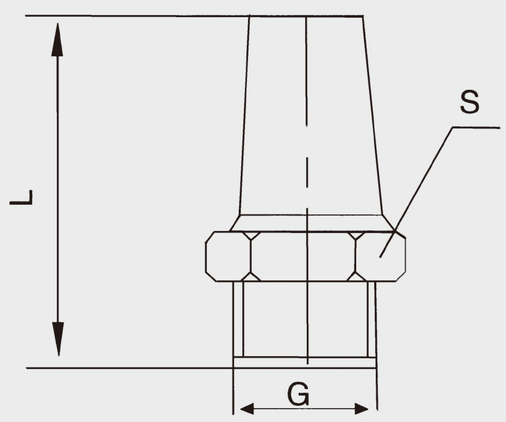

Model	Dimension	
	L	S
M5″	19	8
1/8″	24	12
1/4″	29	15
3/8″	37	18
1/2″	41	21
3/4″	52	27
1″	66	34
1 1/4″	77	46
1 1/2″	83	53
2″	105	64

BSLM Type Muffler

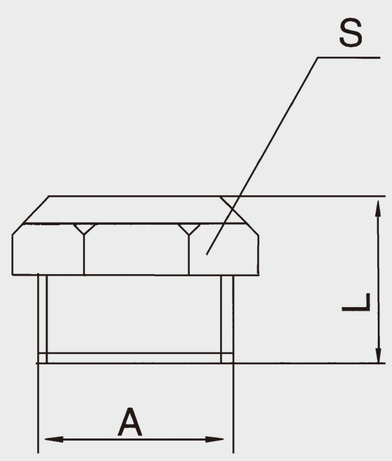

Model	Dimension			
	L		S	
	A type	B type	A type	B type
1/8″	14	10	13	12
1/4″	17	12	16	15
3/8″	18	13	19	18
1/2″	20	14	24	21
3/4″	23	17	30	27
1″	25	21	36	34
	12	9	8	8

BEB Type Muffler

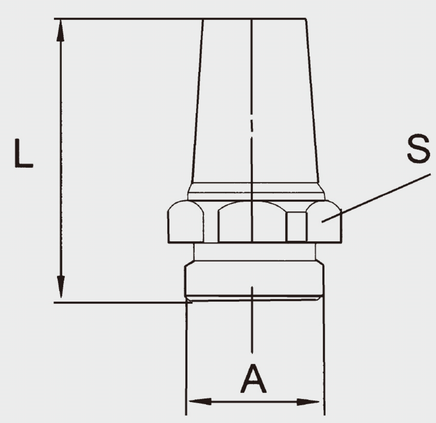

Model	Dimension	
	L	S
1/8″	20.5	12
1/4″	26.5	15
3/8″	33.9	19
1/2″	40.5	23
3/4″	51.5	30
1″	66	36
M5	17	7

SC Type Muffler

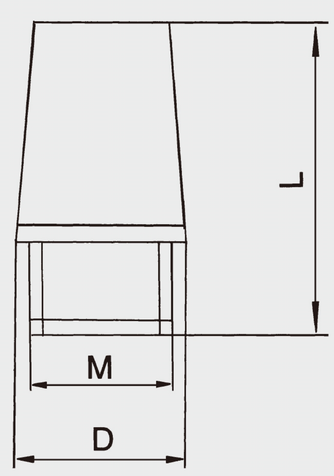

Model	Dimension	
	L	D
1/8″	21	12
1/4″	25	15
3/8″	36	19
1/2″	43	23
3/4″	53	29
1″	63	36

MUFFLERS

SCQ Type Muffler

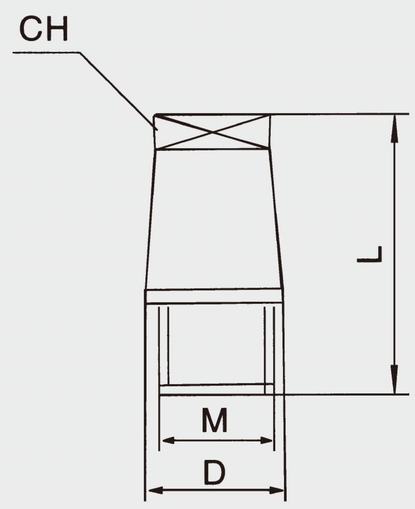

Model	Dimension		
	L	D	CH
1/8″	21	12	7
1/4″	25	15	8
3/8″	38	19	10
1/2″	43	23	14
3/4″	53	29	17
1″	63	36	23

SET Type Muffler

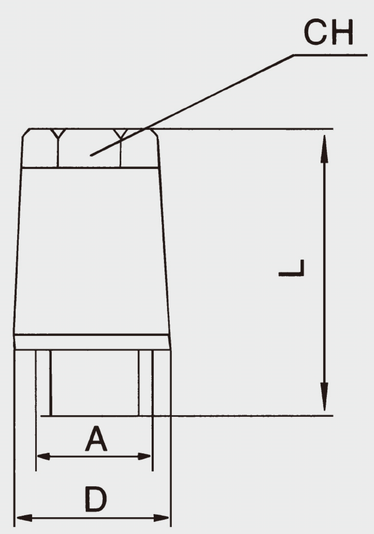

Model	Dimension		
	L	D	CH
1/8″	17.5	12	8
1/4″	24	15	10
3/8″	31	19	13
1/2″	37	23	14
3/4″	50	30	19
1″	62	37	24

PSU Type Muffler

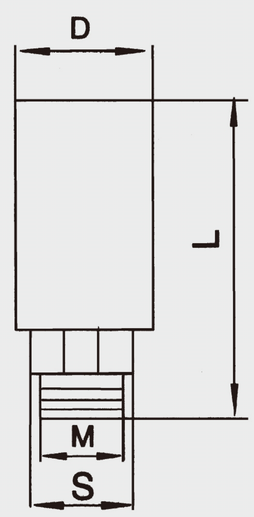

Model	Dimension	
	L	S
1/8″	5	6
1/4″	6	8
3/8″	7	10
1/2″	8	15
3/4″	9	20
1″	10	26

SU Type Muffler

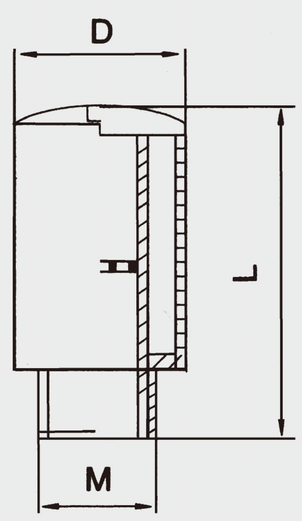

Model	Dimension	
	L	D
1/8″	33	16
1/4″	43	20
3/8″	56	24
1/2″	56	24
3/4″	112	48
1″	112	48